Low-Temperature-Drying

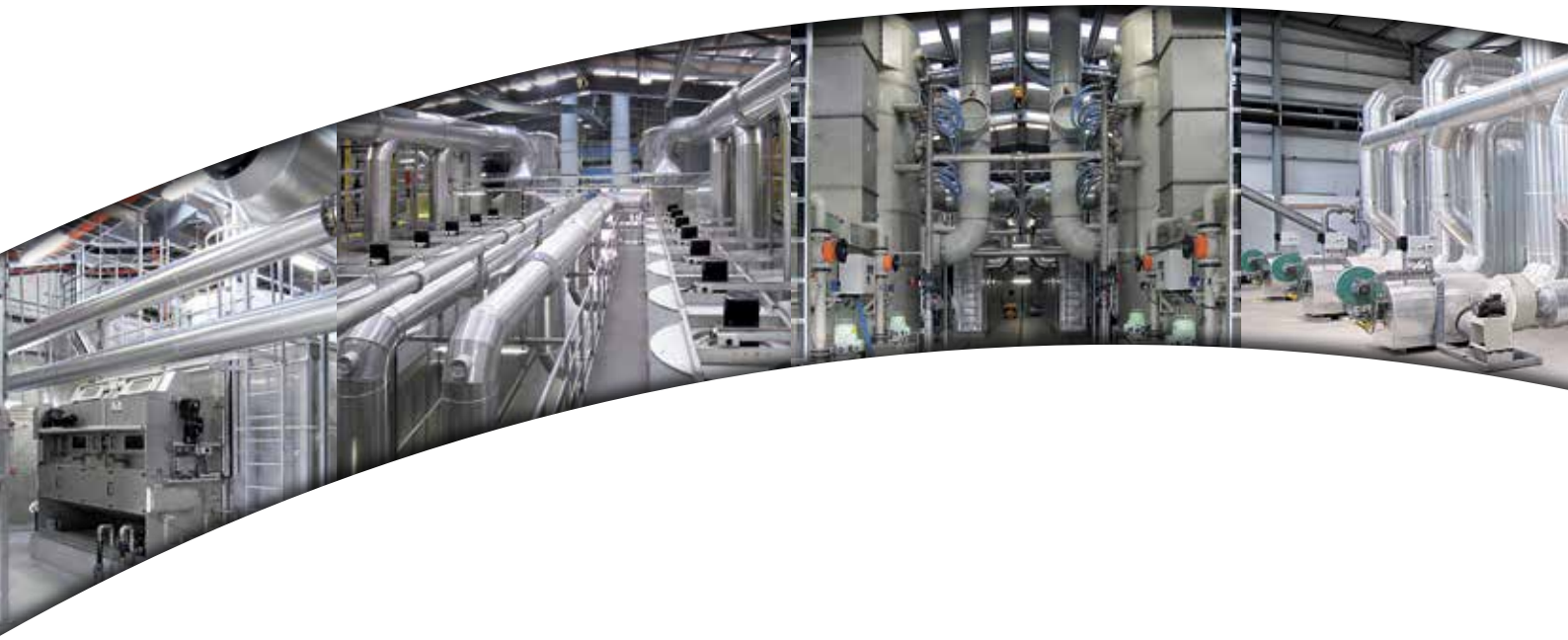

SÜLZLE
KLEIN

Drying of sludge and other suspensions with the Low-Temperature-Dryers of SÜLZLE KLEIN

SÜLZLE KLEIN provides machines and plants for a large number of applications throughout the world. The main focus, in each case, is on volume reduction, recycling and separation of sludges and other suspensions. Our designs are made for consequent utilisation of energy resources, as for example waste heat.

Low-Temperature-Dryer type Pro-Dry®

Low-Temperature-Drying

The products of SÜLZLE KLEIN are designed for the treatment of suspensions and pre-dewatered products that are usually waste or difficult waste materials. Therefore, the prior aim is to reduce the volume of these materials as much as possible in order to minimize the waste disposal costs.

The different processes, as thickening, dewatering and drying, enable a concentration of suspensions with a water content of more than 99 % to a residual product with a water content of < 10 %.

Based on the high organic percentage of the suspensions the dried material forms an attractive combustible. The dried granulate is hygienised, almost dust-free and easily storable.

Drying of sludge and other suspensions also enables further utilisation possibilities, like combustion or gasification. In some cases the use as fertilizer may be possible as well.

Reduction of disposal costs

One ton of dried material with a moisture content of 70 % is reduced to 330 kg dried granulate with a moisture content of 10 %. The drying process produces an abrasion-resistant, recyclable dry product which is suitable for all further disposal procedures.

Air fans of two Low-Temperature-Dryers type Pro-Dry®

Utilisation of low temperature waste heat

An interesting aspect for the drying process is the utilisation of low-temperature waste heat generated by different processes as energy sources.

The preheating of the drying air can be performed with waste heat, warm water, warm exhaust gases or low-pressure steam as well as with biogas, natural gas, oil or any other available energy source.

A typical energy source is warm water with a temperature of approx. 80 °C which is transferred to the drying air by heat exchangers.

ATEX - certified process

The Low-Temperature-Dryers of SÜLZLE KLEIN are designed for a continuous operation. In order to guarantee a trouble-free process, 24/7, every single operating condition is supervised with modern control programs.

The monitoring devices, as dust and temperature measurement etc., avoid critical situations and enable a certification of our technology according to the ATEX regulations.

Utilisation possibilities of dried sewage sludge

The product of the drying process is an almost dust-free and abrasion proof granulate with min. 90 % DS that is easily storable. The net calorific value of dried sewage sludge is comparable to brown coal. Therefore the granulate is very suitable for further utilisation processes, like incineration or gasification.

Compact-Dry

150 -700

Conti-Dry

500 - 5,000

Pro-Dry®

500 - 6,000

Water evaporation in kg/h per line

Drying of fermented substrates and biomass with the modular designed Belt-Dryer Compact-Dry

The Low-Temperature-Dryer Compact-Dry of SÜLZLE KLEIN is a Belt-Dryer with two belts, arranged one above the other. The modular design of the dryer enables a flexible adaption of the belt length to different quantities of sludge.

Low-temperature drying of biomass and fermented substrates

The Low-Temperature-Dryer Compact-Dry is a modular designed drying system which is delivered "almost ready to run".

A working unit can be created by the combination of several fully equipped segments that can easily be activated by „plug-and-play".

The number of segments depends on the required throughput resp. the evaporation capacity of the Belt-Dryer Compact-Dry.

Technical Data

- *Water evaporation: 150 - 700 kg/h*
- *Inlet-DS: 20 - 30 %*
- *Outlet-DS: 80 - 90 %*
- *Thermal energy consumption: approx. 850 kW/t H_2O*
- *Electrical energy consumption: approx. 70 kW/t H_2O*

As the inner design of the segments may vary according to individual requirements, the Compact-Dry technology can be used for the drying of wood chips, fermented substrates, biological waste, municipal or industrial sludge and more.

The segments are equipped with heat exchangers in order to heat the Low-Temperature-Dryer Compact-Dry with waste heat (between 60 and 90 °C) from CHP-units.

The throughput depends on the temperature. Higher temperatures can be reached with hot water, thermal oil, steam and flue gas.

The modular design does not neglect safety, safety is still first. The equipment is built in accordance to the state of the art and the known directives.

The Low-Temperature-Dryer Compact-Dry is ATEX certified because of the prevention of dust deposits and ignition sources and the constant supervision of the conditions inside the Belt-Dryer.

Belt-Dryer Compact-Dry 2/2

Fields of application

- *Sewage sludge*
- *Recycling products*
- *Paper sludge*
- *Fermentation residues*
- *Wood and biomass waste*
- *Lime sludge*
- *Extruded and pelletized products*
- *Granulates*
- *Bulk materials*

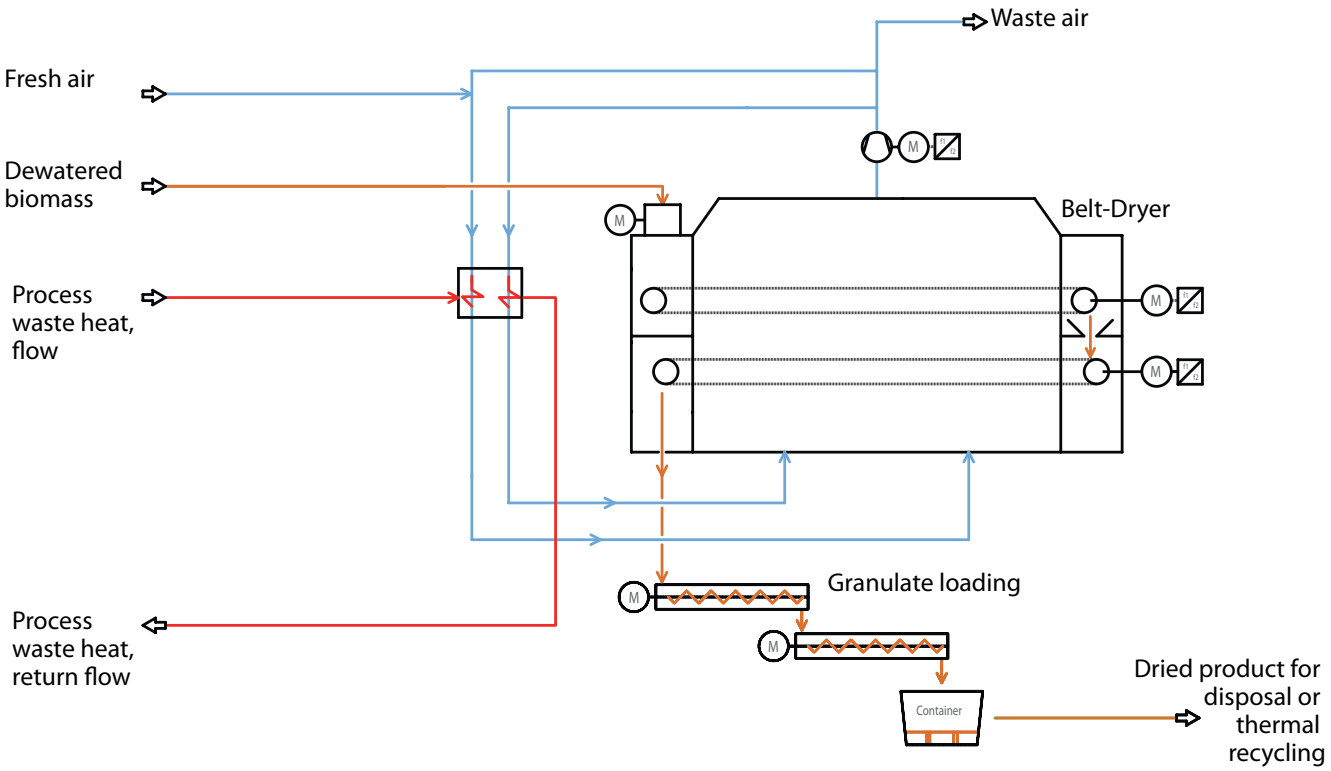

Basic scheme of the drying process with the Belt-Dryer Compact-Dry

Advantages

- *Water evaporation: 150 - 700 kg/h*
- *Careful drying at low temperatures*
- *No danger of explosion or fire*
- *Safe process with low maintenance requirements*
- *Utilisation of „low-quality“ or low-temperature energy sources (waste heat)*
- *The dried material is an easily storable, abrasion-proof and almost dust-free granulate*
- *Considerable reduction of disposal costs by weight reduction*
- *Pollution by waste air and odour emission far below required limit values (with appropriate odour treatment)*
- *Low investment costs*
- *24-h operation*
- *Installation and operation of the drying system acc. to ATEX regulations*
- *Easily extendable by modular design*

Drying of sludges with the semi-modular designed Belt-Dryer Conti-Dry

The Low-Temperature-Dryer Conti-Dry of SÜLZLE KLEIN is a Belt-Dryer with two belts installed in a container. The container enables an uncomplicated transport and the choice between fixed installation or mobile plant.

Low-temperature drying of biomass, fermented substrates and sludge

The Low-Temperature-Dryer Conti-Dry is a modular designed drying system which is delivered "almost ready to run" and which complements the Compact-Dry line with higher capacities and water evaporation rates.

A working unit can be created by the combination of several fully equipped segments that can be easily activated by „plug-and-play".

Technical Data

- *Water evaporation: 500 - 5,000 kg/h*
- *Inlet-DS: 15 - 60 %*
- *Outlet-DS: 60 - 95 %*
- *Thermal energy consumption: 750 - 900 kW/t H_2O*
- *Electrical energy consumption: 70 - 100 kW/t H_2O*

The Low-Temperature-Dryer Conti-Dry can be provided with further equipment, as for example belt and tray cleaning.

The number of segments depends on the required throughput resp. the evaporation capacity of the Belt-Dryer Conti-Dry.

As the inner design of the segments may vary according to individual requirements, the Conti-Dry technology can be used for the drying of wood chips, fermented substrates, biological waste, municipal or industrial sludge and more.

The components are equipped with heat exchangers so that the Low-Temperature-Dryer Conti-Dry can be heated with waste heat (between 60 and 90 °C) from cogeneration units.

The throughput depends on the temperature. Higher temperatures can be reached with hot water, thermal oil, steam and flue gas.

The Low-Temperature-Dryer Conti-Dry is ATEX certified because of the constant supervision of the conditions inside the Belt-Dryer.

Fields of application

- *Sewage sludge*
- *Recycling products*
- *Paper sludge*
- *Fermentation residues*
- *Wood and biomass waste*
- *Lime sludge*
- *Extruded and pelletized products*
- *Granulates*
- *Bulk materials*

Low-Temperature-Dryer Conti-Dry

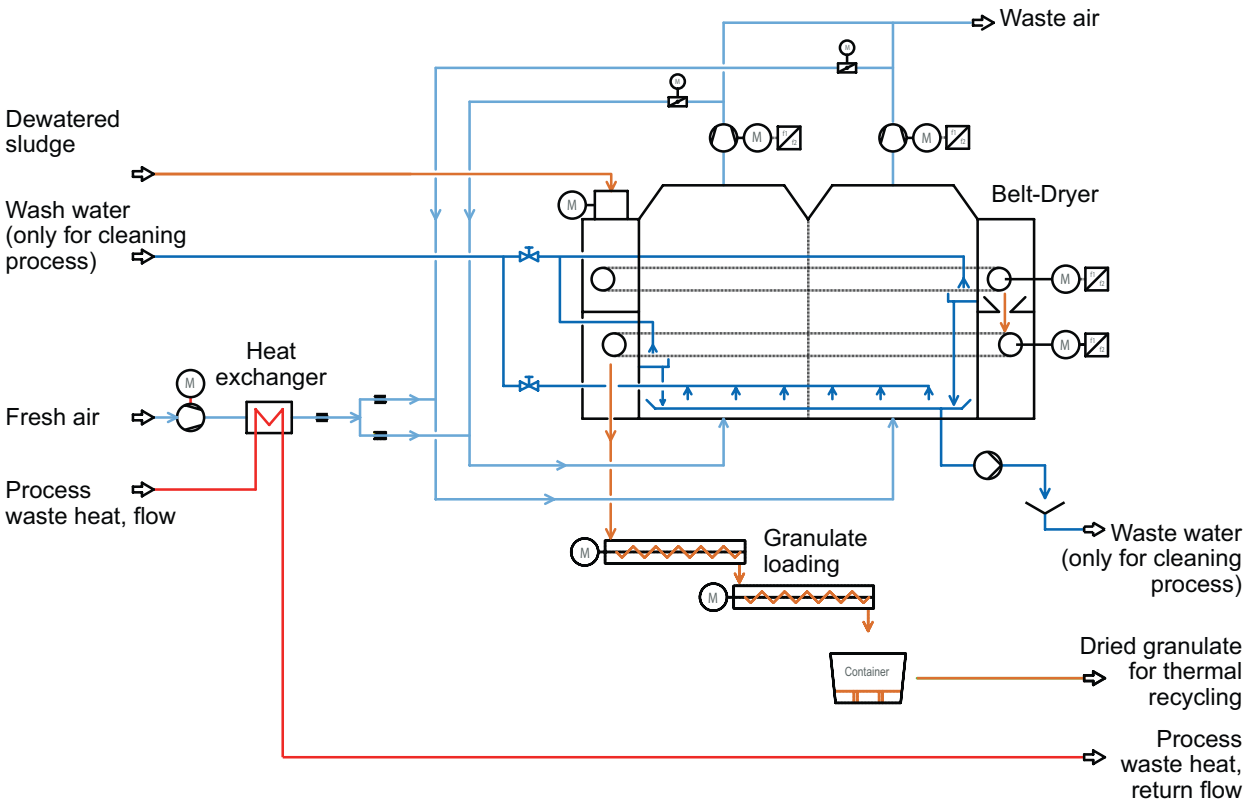

Basic scheme of the drying process with the Belt-Dryer Conti-Dry

Advantages

- *Water evaporation: 500 - 5,000 kg/h*
- *Uncomplicated transport because of container*
- *Optionally as fixed installation or mobile plant available*
- *Careful drying at low temperatures*
- *Safe process with low maintenance requirements*
- *No danger of explosion or fire*
- *Utilisation of „low-quality“ or low-temperature energy source (waste heat)*
- *Dried material is an easily storable, abrasion-proof and almost dust-free granulate*
- *Easily extendable by modular design*
- *Considerable reduction of disposal costs by weight reduction*
- *Pollution by waste air and odour emission far below required limit values (with appropriate odour treatment)*
- *Low investment costs*
- *24-h operation*
- *Installation and operation of the drying system acc. to ATEX regulations*

Drying of sludges and other suspensions with the Belt-Dryer Pro-Dry®

The Low-Temperature-Dryer Pro-Dry® is designed for high-efficient drying. Its design enables transportation of a high amount of sludge and other suspensions with an appropriate long retention time through the drying-zone with 80 - 90 °C.

Low-Temperature-Drying of sewage sludge

The Belt-Dryer Pro-Dry® is designed for the drying of sewage sludge and other suspensions from municipal and industrial wastewater treatment plants up to 92 % DS.

The Low-Temperature-Dryer and the ventilation technology are made from stainless steel for corrosion prevention and for a long lifetime.

In order to use waste heat from cogeneration units the Belt-Dryer is designed for a 24-h-operation.

The low temperatures guarantee a careful and safe drying.

Technical Data

- *Water evaporation: 500 - 6,000 kg/h*
- *Inlet-DS: 15 - 60 %*
- *Outlet-DS: 60 - 95 %*
- *Thermal energy consumption: 750 - 900 kW/t H_2O*
- *Electrical energy consumption: 70 - 100 kW/t H_2O*

An interesting aspect from the economical point of view is the utilisation of waste heat from different processes.

Waste heat can be for example warm water, warm waste air, steam, biogas, natural gas, oil or other available resources that are used for the preheating of the air.

A typical application is the utilisation of warm water at a temperature of about 80 °C that is transferred to the air by heat exchangers.

The product of the drying process with the Low-Temperature-Dryer Pro-Dry® is an almost dust-free and abrasion-proof granulate that is easily storable.

The net calorific value of the granulate is comparable to brown coal. Therefore this dried product is suitable for further treatments, as for example gasification or incineration.

Low-Temperature-Dryer Pro-Dry® 2/3

Fields of application

- *Sewage sludge*
- *Recycling products*
- *Paper sludge*
- *Fermentation residues*
- *Wood and biomass waste*
- *Lime sludge*
- *Extruded and pelletized products*
- *Granulates and bulk materials*

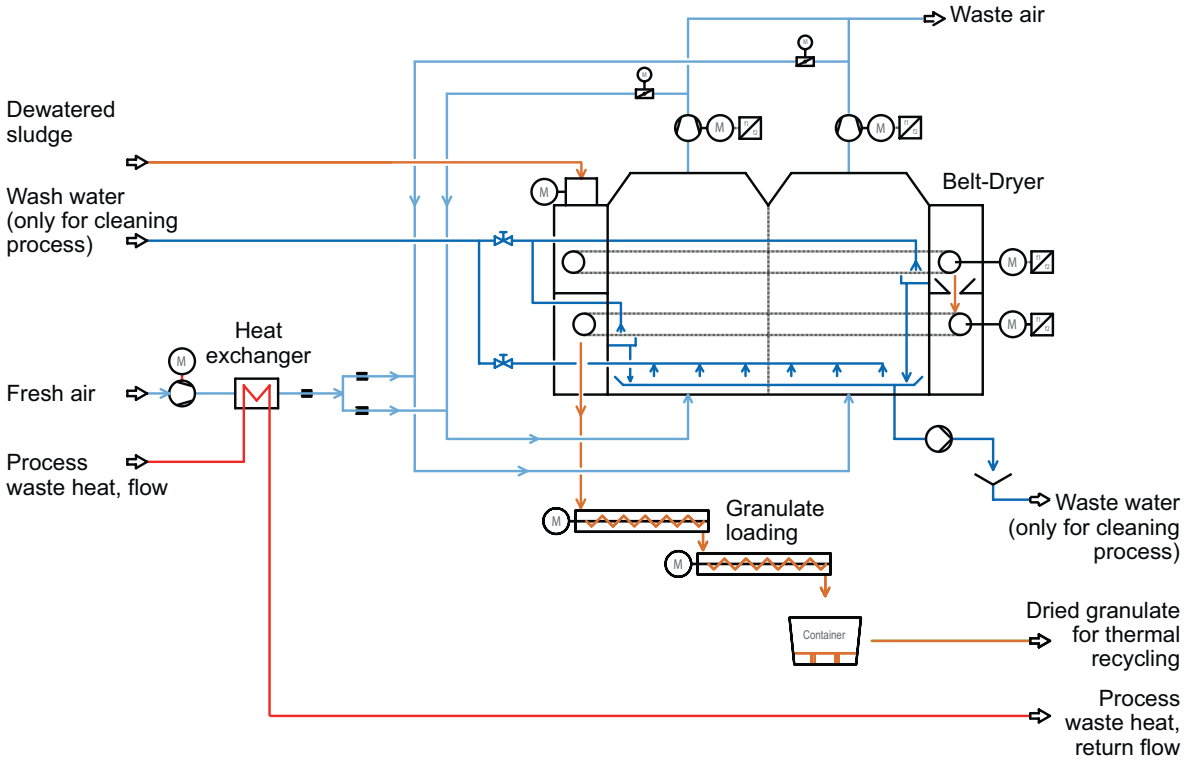

Basic scheme of the drying process with the Belt-Dryer Pro-Dry®

Advantages

- *Water evaporation: 500 - 6,000 kg/h*
- *High efficiency by lowest thermal energy consumption*
- *Careful drying at low temperatures*
- *Safe process with low maintenance requirements*
- *No danger of explosion or fire*
- *Utilisation of „low-quality" or low-temperature energy source (waste heat)*
- *Dried material is an easily storable, abrasion-proof and almost dust-free granulate*
- *Easily extendable by modular design*
- *Considerable reduction of disposal costs by weight reduction*
- *Pollution by waste air and odour emission far below required limit values (with appropriate odour treatment)*
- *Low investment costs*
- *24-h operation*
- *Installation and operation of the drying system acc. to ATEX regulations*

Sülzle Klein GmbH
Konrad-Adenauer-Str. 194
57572 Niederfischbach
GERMANY

Tel. +49 2734 43480-0
Fax +49 2734 43480-130
info@suelzle-klein.com
www.suelzle-klein.com